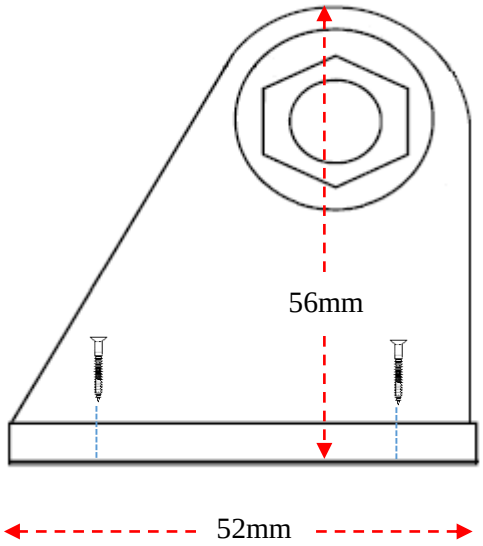
56mm
52mm

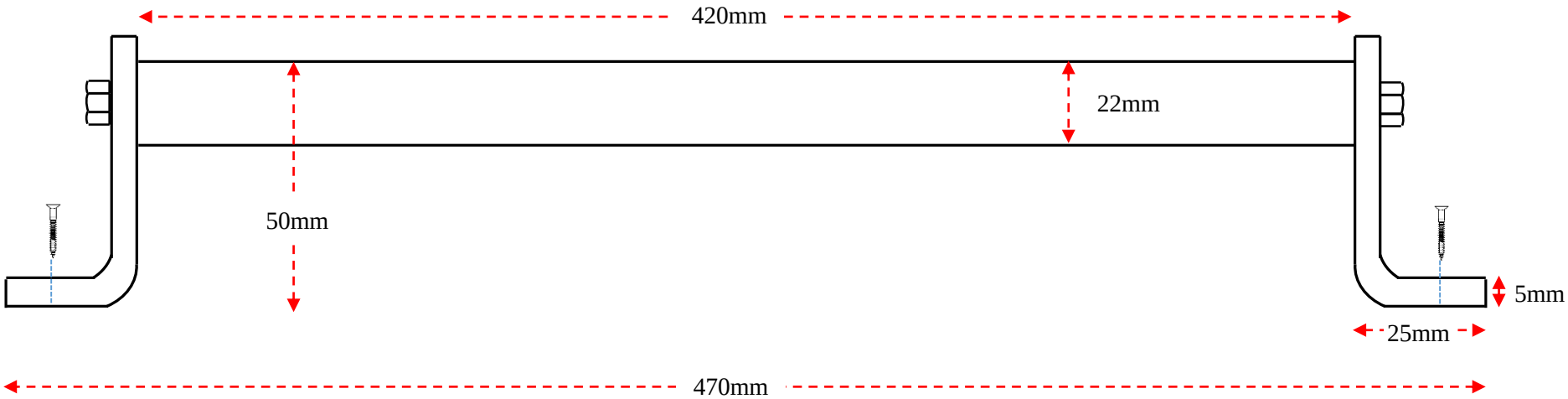
420mm
22mm
50mm
5mm
25mm
470mm